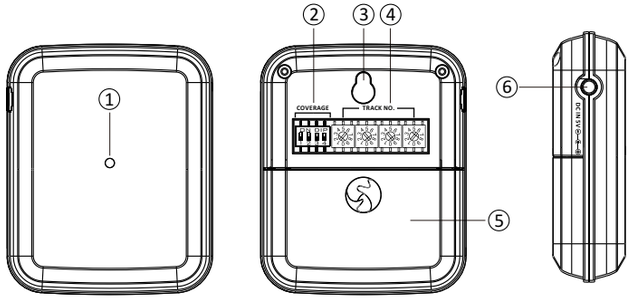

Illustration

① Power indicator
② Power switches (DIP) and power mode setup
③ Hanging hole
④ Track number setup
⑤ Battery door
⑥ DC input socket

Operation

Power On

Any DIP switch ② moves to ON position will turn this device on. Power indicator ① will light up for 2 seconds and then off. Indicator will blink every 2 seconds when device is working.

Power OFF

When all DIP switches ② move to OFF (downward) position, the device will be turned off.

Track Number Setting

Tracking number is set by ④ rotary switches, from left hand side to right hand side. Every single IR trigger can activate one tracking number only. An example (1996) is shown as below.

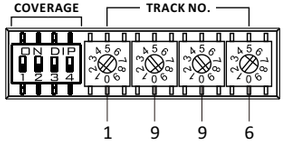

COVERAGE setting

Set a desired IR triggering range with DIP switch. A table below gives all possible settings and respective functions.

DIP	Status	Power
	OFF	OFF
	ON	P1
	ON	P2
	ON	P3
	ON	P4

P1 (Max coverage) > P2 > P3 > P4 (Min coverage)

Power Supply

Insert 2 AA batteries or connected with factory supplied power adapter (5V / 1A).

※ Adapter can't charge battery. When battery and adapter are employed at the same time, this IR trigger will consume energy from adapter only.

Power Indicator

- Indicator blinks in Green = sufficient battery energy or adapter employed.
- Indicator blinks in Red = low battery

Specifications

Wave length	940 nm
Required power	5 Vdc / 1 A
Battery	2 AA
Battery autonomy	> 90 days (at any triggering coverage)
Coverage	P1 → 10 M
	P2 → 4.5 M
	P3 → 3 M
	P4 → 1.5 M
Tracking number	0001-9999
Power consumption	< 10 mA (Max)
Ambient temp.	-10 °C ~ +50 °C
Dimensions (DxWxH)	23 x 65 x 80 (mm)
Weight	46 g (without battery)

※ Specifications are subject to change

Manual IR Trigger

IR signal coverage on application

(Fig. 1)

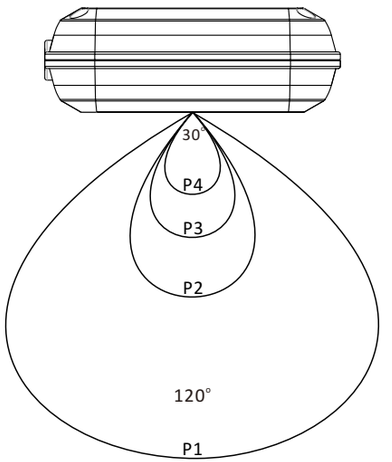

(Fig. 2)

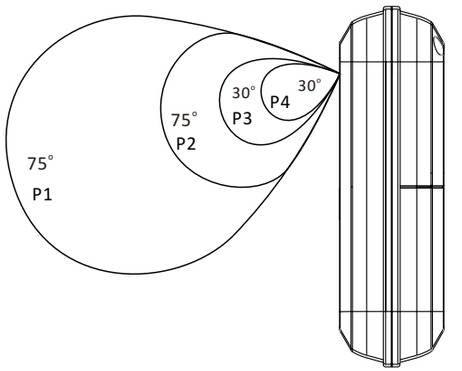

This device complies with Part 15 of the FCC Rules. Operation is subject to the following two conditions:
(1) this device may not cause harmful interference, and (2) this device must accept any interference received, including interference that may cause undesired operation.

Notice: The changes or modifications not expressly approved by the party responsible for compliance could void the user's authority to operate the equipment.

NOTE: This equipment has been tested and found to comply with the limits for a Class B digital device, pursuant to part 15 of the FCC Rules. These limits are designed to provide reasonable protection against harmful interference in a residential installation.

This equipment generates, uses and can radiate radio frequency energy and, if not installed and used in accordance with the instructions, may cause harmful interference to radio communications. However, there is no guarantee that interference will not occur in a particular installation.

If this equipment does cause harmful interference to radio or television reception, which can be determined by turning the equipment off and on, the user is encouraged to try to correct the interference by one or more of the following measures:
—Reorient or relocate the receiving antenna.
—Increase the separation between the equipment and receiver.
—Connect the equipment into an outlet on a circuit different from that to which the receiver is connected.
—Consult the dealer or an experienced radio/ TV technician for help.

※ Specifications are subject to change